Operating and installation instructions
Wine conditioning unit



To avoid the risk of accidents or damage to the appliance it is **essential** to read these instructions before it is installed and used for the first time.

en-GB, ZA

M.-Nr. 10 531 901

Contents

Warning and Safety instructions 5

Caring for the environment 12

How to save energy 13

Guide to the appliance 14
Symbols 15
Door catch 17

Accessories 18
Accessories supplied 18
Optional accessories 18

Switching on and off 19
Before using for the first time 19
Operating the wine conditioning unit 19
Switching on 19
Switching off 20
Switching off for longer periods of time 21

Selecting further settings 22
Safety lock 22
Audible tones 23
Display brightness 24

The optimum temperature and air quality 25
The optimum temperature 25
Setting the temperature 26
Temperature range 27
Temperature display 27
Air quality and humidity 28
DynaCool (constant humidity) 28
Air filtration with the Active AirClean filter 29

Temperature and door alarm 30

Feature lighting 32
Switching the feature lighting on and off 32
Setting the brightness of the feature lighting 32
Lighting duration of the feature lighting 33

Storing wine bottles 34
Maximum stacking height for wine bottles in the cabinet 34

Contents

Wooden shelves 34
Moving the wooden shelves 35
Adjusting the wooden shelves 36
Annotating wooden shelves 36
Inserting the decor shelf 37
Maximum capacity 37

Automatic defrosting 38

Cleaning and care 39
Cleaning agents 39
Before cleaning 40
Interior, appliance door and accessories 40
Cleaning the ventilation gaps 41
Cleaning the door seal 41
Cleaning the air filter 41

Active AirClean filters 42
Replacing the Active AirClean filter 42

Problem solving guide 44

Noises 49

After Sales / Warranty 50

Information for dealers 51
Demo mode 51

Electrical connection 53

Installation 54
Location 54
Side-by-side 55
Climate range 55
Ventilation 56
Before installing the wine conditioning unit 56
Door opening angle limiter 57
Appliance dimensions 58

Adjusting the door hinges 59

Changing the door hinging 60

Contents

Installing the wine conditioning unit 65
Setting up the wine conditioning unit 66
Aligning the wine conditioning unit to taller furniture doors 68
Push the wine conditioning unit into the niche 69
Secure the wine conditioning unit in the niche 69
Adjusting the lateral alignment of the appliance door 71

This wine conditioning unit complies with all statutory safety requirements. Please note that inappropriate use can lead to personal injury and damage to property.

To avoid the risk of accidents and damage to the appliance, please read these instructions carefully before using it for the first time. They contain important notes on installation, safety, use and maintenance.

Miele cannot be held liable for non-compliance with these instructions.

Keep these instructions in a safe place and ensure that new users are familiar with the contents. Pass them on to any future owner.

⚠ Glass breakage.
Danger of injury from broken glass.
If installed at altitudes above 1500 m there is a risk of the glass in the door breaking because of changes in air pressure. Shards of glass can cause severe injury if not handled with care.

Correct application

▶ This wine conditioning unit is intended for use in the home and in similar environments, for example
– in shops, offices and similar work settings
– by the guests in hotels, motels, bed & breakfasts and other typical home settings.
This wine conditioning unit is not intended for outdoor use.

▶ The wine conditioning unit is intended for domestic use only for storing wine.
It must not be used for any other purpose.

▶ The wine conditioning unit is not suitable for storing and keeping cool medicines, blood plasma, laboratory preparations or other such materials or products. Incorrect use of the wine conditioning unit for such purposes can cause deterioration of the items stored. The wine conditioning unit is not suitable for use in areas where there is a risk of explosion.
Miele cannot be held liable for damage resulting from improper or incorrect use of the appliance.

▶ The wine conditioning unit can only be used by people with reduced physical, sensory or mental capabilities, or lack of experience and knowledge, if they are supervised whilst using it, or have been shown how to use it in a safe way and recognise and understand the consequences of incorrect operation.

Safety with children

▶ Children under 8 years of age must be kept away from the wine conditioning unit unless they are constantly supervised.

▶ Children 8 years and older may only use the wine conditioning unit unsupervised if they have been shown how to use it safely and recognise and understand the consequences of incorrect operation.

▶ Children must not be allowed to clean or maintain the wine conditioning unit unsupervised.

▶ Please supervise children in the vicinity of the wine conditioning unit and do not let them play with it.

▶ Danger of suffocation! Whilst playing, children could become entangled in packaging (such as plastic wrapping) or pull it over their head and suffocate. Keep packaging material away from children.

Technical safety

▶ The coolant system is tested for leaks. The wine conditioning unit complies with statutory safety requirements and the appropriate EU guidelines.



▶ This wine conditioning unit contains the coolant Isobutane (R600a), a natural gas which is environmentally friendly. Although it is flammable, it does not damage the ozone layer and does not increase the greenhouse effect.
The use of this coolant has, however, led to a slight increase in the noise level of the appliance. In addition to the noise of the compressor, you might be able to hear the coolant flowing around the system. This is unavoidable, and does not have any adverse effect on the performance of the appliance.
Care must be taken during the transportation and setting up of the wine conditioning unit that no parts of the cooling system are damaged. Leaking coolant can damage the eyes.
In the event of any damage:

- avoid naked flames or anything which creates a spark,
- disconnect the appliance from the mains electricity supply,
- ventilate the room where the wine conditioning unit is located for several minutes, and
- contact the Miele Service Department.

▶ The more coolant there is in a wine conditioning unit, the larger the room it should be installed in. In the event of a leakage, if the appliance is in a small room, there is the danger of combustible gases building up. For every 11 g of coolant at least 1 m^3 of room space is required. The amount of coolant in the appliance is stated on the data plate inside the wine conditioning unit.

▶ To avoid the risk of damage to the wine conditioning unit, make sure that the connection data (fuse rating, frequency and voltage) on the data plate corresponds to the household supply.
Check that this is the case before connecting the wine conditioning unit. Consult a qualified electrician if in any doubt.

▶ The electrical safety of the wine conditioning unit can only be guaranteed when correctly earthed. It is essential that this standard safety requirement is met. If in any doubt please have the electrical installation tested by a qualified electrician.

▶ Reliable and safe operation of the wine conditioning unit can only be assured if it has been connected to the mains electricity supply.

▶ If the electrical connection cable is faulty it must only be replaced by a Miele authorised service technician to protect the user from danger.

▶ Do not connect the wine conditioning unit to the mains electrical supply by a multi-socket adapter or extension lead. These are a fire hazard and do not guarantee the required safety of the appliance.

▶ If moisture gets into electrical components, it could cause a short circuit. Therefore, do not operate this wine conditioning unit in areas which are exposed to moisture (e.g in a garage or utility room).

▶ This wine conditioning unit must not be used in a non-stationary location (e.g. on a ship).

▶ Do not use a damaged wine conditioning unit. It could be dangerous. Check the wine conditioning unit for visible signs of damage.

▶ For safety reasons, this wine conditioning unit may only be used after it has been built in.

▶ The wine conditioning unit must be isolated from the electricity supply during installation, maintenance and repair work.

▶ Unauthorised installation, maintenance and repairs can cause considerable danger for the user.
Installation, maintenance and repairs must only be carried out by a Miele authorised technician.

▶ While the wine conditioning unit is under guarantee, repairs should only be undertaken by a Miele authorised service technician. Otherwise the guarantee is invalidated.

▶ Miele can only guarantee the safety of the appliance when genuine original Miele replacement parts are used. Faulty components must only be replaced by Miele spare parts.

Correct use

▶ The wine conditioning unit is designed for use within a certain climate range (ambient temperatures), and should not be used outside this range. The climate range for your wine conditioning unit is stated on the data plate inside the appliance. Installing it in a room with too low an ambient temperature, e.g. a garage, will lead to the wine conditioning unit switching off for longer periods so that it cannot maintain the required temperature.

▶ Do not cover or block the air vents as this could impair the efficiency of the appliance, increase the electricity consumption and could cause damage to the components.

▶ If the wine conditioning unit is used for storing food which contains fat or oil, make sure that it does not come into contact with plastic components as any spillages of oil or fat could cause stress cracks to the plastic and cause it to break or split.

▶ Do not store explosive materials in the wine conditioning unit or any products containing propellants (e.g. spray cans). Electrical components could cause flammable vapours to ignite. Danger of fire and explosion.

▶ Do not operate any electrical equipment (e.g. an electric ice cream maker) inside the wine conditioning unit. Danger of sparking and explosion.

▶ Only use genuine original Miele accessories and spare parts with this appliance. Using accessories or spare parts from other manufacturers will invalidate the warranty, and Miele cannot accept liability.

Cleaning and care

▶ Do not use any oils or grease on the door seals, as these will cause the seals to deteriorate and become porous with time.

▶ Do not use a steam cleaning appliance to clean this wine conditioning unit.
The steam could reach electrical components and cause a short circuit.

▶ Sharp edged or pointed objects will damage the evaporator, causing irreversible damage to the wine conditioning unit. Do not use sharp edged or pointed objects to

– remove frost and ice,
– remove labels, stickers etc.

Transporting the appliance

▶ Always transport the wine conditioning unit in an upright position and in its original transport packaging to avoid damage in transit.

▶ Danger of injury and damage. The wine conditioning unit is very heavy and must be transported by two people.

Disposing of your old appliance

▶ Before disposing of an old appliance, first make the door latch or lock unusable.
This way you will prevent children from accidentally locking themselves in and endangering their lives.

▶ Splashes of coolant can damage the eyes. Be careful not to damage any part of the pipework whilst awaiting disposal, e.g. by

– puncturing the coolant channels in the condenser,
– bending any pipework, or
– scratching the surface coating.

Caring for the environment

Disposal of the packing material

The packaging is designed to protect the wine conditioning unit from damage during transportation. The packaging materials used are selected from materials which are environmentally friendly for disposal and should be recycled.

Recycling the packaging reduces the use of raw materials in the manufacturing process and also reduces the amount of waste in landfill sites.

Disposal of your old appliance

Electrical and electronic appliances often contain valuable materials. They also contain specific materials, compounds and components, which were essential for their correct function and safety. These could be hazardous to human health and to the environment if disposed of with your domestic waste or if handled incorrectly. Please do not, therefore, dispose of your old appliance with your household waste.

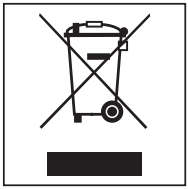

Please dispose of it at your local community waste collection / recycling centre for electrical and electronic appliances, or contact your dealer or Miele for advice. You are also responsible (by law, depending on country) for deleting any personal data that may be stored on the appliance being disposed of.

Take care not to damage the pipework at the back of your wine conditioning unit before or during transportation to an authorised collection depot.
In this way, coolant in the pipework and oil in the compressor will be contained, and will not leak into the environment.

Please ensure that your old appliance presents no danger to children while being stored awaiting disposal. See "Warning and Safety instructions" for more information.

	Normal energy consumption	Increased energy consumption
Installation site / Maintenance	In a ventilated room.	In an enclosed, unventilated room.
	Protected from direct sunlight.	In direct sunlight.
	Not near to a heat source (radiator, oven).	Near to a heat source (radiator, oven).
	Where the ideal ambient room temperature is approx. 20 °C.	Where there is a high ambient room temperature.
	Ventilation gaps uncovered and dusted regularly.	Ventilation gaps covered or dusty.
	Remove and clean the air filter with a vacuum cleaner at least once a year.	If dust has accumulated on the air filter.
Temperature setting	10 to 12 °C	The lower the temperature, the higher the energy consumption.
Use	Wooden shelves arranged as they were when the appliance was delivered.	
	Only open the door when necessary and for as short a time as possible. Store wine bottles in an organised way.	Frequent opening of the door for long periods will cause a loss of coldness. The wine conditioning unit works harder to cool down and the compressor runs for longer periods.
	Do not over-fill the appliance to allow air to circulate.	Poor air circulation will cause a loss of coldness.

Guide to the appliance

Control panel

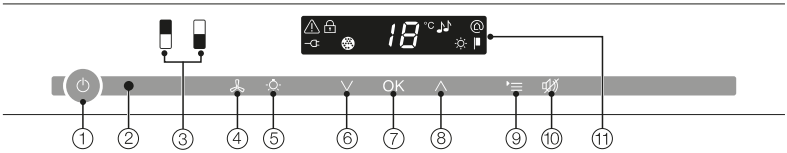

① For switching the whole wine conditioning unit on and off

② Optical interface (for Service technicians only)

③ For selecting the upper or lower wine conditioning zone

④ For switching the DynaCool function (constant humidity) on and off

⑤ For switching the feature lighting on and off

⑥ For setting the temperature (∨ for colder)

⑦ OK sensor for confirming a selection

⑧ For setting the temperature (∧ for warmer)

⑨ For accessing or leaving settings mode

⑩ For switching off the temperature or door alarm

⑪ Display with temperature and symbols (symbols only visible in settings mode; see chart for an explanation of the symbols)

Symbols

Symbol	Meaning	Function
	Safety lock	To prevent inadvertent switching off and altering of settings
	Audible tones	Choice of sensor tone and door alarm tone
	Miele@home	Only visible when a communication module or communication stick is fitted and signed on (see "Miele@home")
	Demo mode (only visible when Demo mode is switched on)	For switching off Demo mode
	Display brightness settings	For adjusting the brightness of the display
	Active AirClean filters	Lights up when the active charcoal filter needs changing
	Mains connection	Confirms that the wine conditioning unit is connected to the electricity supply when it is not switched on; flashes in the event of a power cut
	Alarm	Lights up when there is a door alarm; flashes when there is a temperature alarm, power cut or a fault

Guide to the appliance

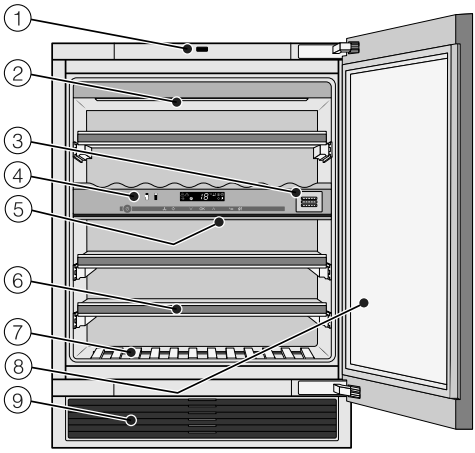

① Push2open door catch

② Strip lighting (in both wine conditioning zones)

③ Active AirClean filter

④ Controls for the upper and lower wine conditioning zones/Isolator plate for thermal separation of the zones

⑤ Isolator strips for thermal separation of the different conditioning zones

⑥ Wooden shelves with labels (FlexiFrames with Noteboard)

⑦ Decor shelf

⑧ Safety glass door with UV filter

⑨ Ventilation grille with air filter

Door catch

The Push2Open door catch on your wine conditioning unit makes it easy to open the door. The appliance door is sensitive to pressure.

The Push2open system is deactivated ex-works. It has to be activated after installing the appliance in its niche. This is done by pressing the On/Off switch.

To open the door

- Press briefly against the appliance door and then release it. The appliance door opens automatically by a gap.
- Then pull the door fully open.

To protect against inadvertent opening: if you do not open the door wider, it will close again by itself after approx. 3 seconds.

To close the door

- Push the door shut.

⚠ Danger of damage!
To avoid damage to the door catch: do not obstruct the door whilst it is opening.
Do not push in or hold onto the door catch whilst the door is closing.

Please be aware that using magnets in front of the wine conditioning unit door can cause it to open by mistake. This is caused by the door closing mechanism on the wine conditioning unit.

Accessories

Accessories supplied

Chalk

Use the chalk to annotate the magnetic strips on the wooden shelves to identify your wines quickly and easily.

Active AirClean filter

The Active AirClean filter ensures optimum air quality in the wine conditioning unit by filtering the incoming air.

Air filter

The air filter behind the ventilation grille protects the cooling system from dust.

Optional accessories

A range of useful Miele accessories and care products are available for your wine conditioning unit.

Multi-purpose microfibre cloth

The microfibre cloth is suitable for removing fingerprints and light soiling from surfaces such as stainless steel, glass, plastic and chrome without the use of chemicals.

MicroCloth Kit

The MicroCloth Kit contains a universal cloth, a glass cloth and a polishing cloth.
These cloths are extremely rip-proof and hard-wearing. Thanks to very fine microfibres these cloths achieve excellent cleaning results.

Active AirClean filters

See "Accessories supplied".

Side-by-side fitting kit

For a high-quality side-by-side combination of undercounter wine cabinets

Accessories are available to order via the Miele Webshop, from Miele directly (see back cover for contact details) or from your Miele dealer.

Before using for the first time

Packaging material

- Remove all packaging material from the inside of the appliance.

Protective foil (depending on model)

Stainless steel surfaces have a layer of protective foil to prevent scratching during transportation.

- Do not remove the foil until the wine conditioning unit has been installed in its final location. Start at one of the top corners.

Cleaning the wine unit

Please refer to the relevant instructions in "Cleaning and care".

- Clean the inside of the appliance and the accessories.

Operating the wine conditioning unit

A light touch of the finger on the sensors is all that is required to operate this wine conditioning unit.

A tone will sound each time a sensor is touched. You can deactivate this, if you wish (see "Selecting further settings - Audible tones").

Switching on

When the wine conditioning unit is connected to the electrical supply, the mains connection symbol ⏚ will appear in the display after a short while.



- Touch the On/Off sensor.

The mains connection symbol ⏚ will go out and the wine conditioning unit will start to cool.

The sensors for the upper and the lower wine conditioning zones will then appear in the control panel. The selected zone will be highlighted yellow and the temperature of the selected zone will show in the display.
The first time the appliance is switched on the sensors for the wine conditioning zones and the Alarm symbol ⚠ will flash until the selected temperature has been reached in the zones.

As soon as the set temperature has been reached, the sensor for the respective wine conditioning zone will light up constantly. The alarm sym-

bol ⚠ will go out as soon as the set temperatures have been reached in each zone.

The interior lighting will come on when the door is opened.

A different setting can be set for each zone.

■ Touch the sensor for the wine conditioning zone you want to adjust the settings for.

The sensor that has been selected is highlighted in yellow.

– You can now set the temperature, and

– switch on the DynaCool function.

Please refer to the relevant section for more information.

If you then select a different wine conditioning zone, the settings for the previously selected zone will remain unchanged.

Switching off



■ Touch the On/Off sensor.
If this does not work, the safety lock 🔒 is still activated.

The sensors for the two wine conditioning zones will then go out.
The temperature display will go out and the mains connection symbol ⏚ will appear.

The interior lighting will go out and the cooling process will be switched off.

Switching off for longer periods of time

If the wine conditioning unit is not going to be used for a longer period of time, e.g. whilst on holiday:

- switch it off,
- disconnect it from the mains,
- clean it out, and
- leave the door ajar to air the wine conditioning unit and avoid odours building up inside it.

If, during a long absence, the wine conditioning unit is switched off but not cleaned and the door left shut, there is a danger of mould building up inside the appliance.

Selecting further settings

Certain settings on the wine conditioning unit can only be selected in settings mode.

The door alarm is automatically disabled when the appliance is in settings mode.

Safety lock

The safety lock can be activated to prevent:

– the appliance being switched off by mistake,

– the temperature being changed by mistake,

– DynaCool being switched on by mistake,

– the feature lighting being switched on by mistake.

Activating or deactivating the safety lock



■ Touch the settings sensor.

All symbols available for selection will appear in the display and the symbol flashes.



■ Touch the OK sensor to confirm your selection.

The last selected setting flashes and the symbol lights up in the display.



■ By touching the ∧ or ∨ sensor, you can now select whether the safety lock is activated or deactivated:
0: the safety lock is deactivated
1: the safety lock is activated



■ Touch the OK sensor to confirm your selection.

The selected setting is applied, the symbol flashes.



■ Touch the settings sensor to leave settings mode.
Otherwise the appliance exits settings mode automatically after approximately one minute.

The symbol will appear in the display when the lock is activated.

Audible tones ♪♪

The wine conditioning unit has audible tones such as the sensor tone and the door and temperature alarms.

You can switch the sensor tone or the door alarm tone on or off but you cannot deactivate the temperature alarm.

There are four settings to choose from. Option *3* is set the factory, i.e. the sensor tone and the door alarm are switched on.

Switching audible tones on/off



■ Touch the settings sensor.

All symbols available for selection will appear in the display and the 🔒 symbol flashes.



■ Touch the sensors for setting the temperature (∧ or ∨) repeatedly until the ♪♪ symbol flashes.



■ Touch the OK sensor to confirm your selection.

The last selected setting flashes and the ♪♪ symbol lights up in the display.



■ By touching the ∧ or ∨sensor you can now select:
0: sensor tone off; door alarm off
1: sensor tone off; door alarm on (after 4 minutes)
2: sensor tone off; door alarm on (after 2 minutes)
3: sensor tone on; door alarm on (after 2 minutes)



■ Touch the OK sensor to confirm your selection.

The selected setting is applied, the ♪♪ symbol flashes.



■ Touch the settings sensor to leave settings mode.
Otherwise the appliance exits settings mode automatically after approximately one minute.

Display brightness ☼

The display brightness can be adjusted to suit lighting conditions in the room.

The display brightness can be adjusted in steps from *1* to *3*. The factory default setting is *3* (maximum brightness).

Altering the display brightness



■ Touch the settings sensor.

All symbols available for selection will appear in the display and the 🔒 symbol flashes.



■ Touch the sensors for setting the temperature (∧ or ∨) repeatedly until the ☼ symbol flashes.



■ Touch the OK sensor to confirm your selection.

The last selected setting flashes and the ☼ symbol lights up in the display.



■ By touching the ∧ or ∨ sensor you can now alter the brightness of the display:
1: dimmest setting
2: medium setting
3: brightest setting.



■ Touch the OK sensor to confirm your selection.

The selected setting is applied, the ☼ symbol flashes.



■ Touch the settings sensor to leave settings mode.
Otherwise the appliance exits settings mode automatically after approximately one minute.

Wine keeps on maturing depending on the surrounding conditions. The length of time for which wine can be kept in good condition will therefore depend not only on the temperature but also on the air quality.

The wine conditioning unit with its constant ideal temperature, increased air humidity and odour free atmosphere offers the perfect conditions for storing your wine.

It also guarantees a vibration-free environment (in contrast to a refrigerator) so that the maturing process is not disturbed.

The optimum temperature

Wine can be stored at a temperature between 6 and 18 °C. If you are storing white and red wines together, select a temperature between 12 and 14 °C. This is suitable for both white and red wines. Red wine should be taken out of the wine conditioning unit and opened at least two hours before drinking to allow it to breathe and develop its aroma.

At too high a temperature (over 22 °C) wine matures too quickly, which prevents the aromas from developing further. Wine cannot mature fully at too low a temperature (below 5 °C).

Fluctuations in temperature put wine under stress and interrupt the maturing process. It is therefore very important to maintain a constant temperature.

Type of wine	**Recommended drinking temperature**
Light, fruity reds:	+14 °C to +16 °C
Full-bodied reds:	+18 °C
Rosé wines:	+8 °C to +10 °C
Delicate, aromatic whites:	+8 °C to +12 °C
Full-bodied or sweet whites:	+12 °C to +14 °C
Champagne, sparkling white wines:	+6 °C to +10 °C

Tip: Store the wine 1 or 2°C cooler than the recommended drinking temperature as it warms up a little when poured into the glass.

Tip: Full-bodied reds should be opened for 2-3 hours before drinking to allow the wine to breathe and develop its aroma.

Safety device in case of low ambient temperatures

The appliance is equipped with a safety thermostat to protect your wine against a sharp drop in temperature. If the external temperature should fall, a heater element switches on automatically to keep the temperature inside as constant as possible. If the ambient temperature continues to fall, the appliance switches itself off automatically.

Isolator plate for thermal separation

The unit comes with a fixed isolation panel that partitions the interior of the wine conditioning unit into two separate temperature zones. This enables you to store different types of wine at the same time, e.g., red wine and Champagne. The isolation strips inside the glass door prevent the exchange of heat between the individual zones.

Setting the temperature

The temperature in the wine conditioning zones can be set independently of one another.

- Touch the sensor for the zone for which you wish to change the temperature, so that it is highlighted in yellow.

The current temperature for the selected zone appears in the display.

- Use the two sensors underneath the display to set the temperature.

By touching the sensor



– the temperature will get colder



– the temperature will get warmer.



- Touch the OK sensor to confirm your selection
  or
- wait approximately 5 seconds after the last touch of a sensor.

The temperature being set will flash in the display.

The following information shows in the display while the sensors are being touched:

– Touching a sensor once: the **last temperature selected** flashes.

– Each subsequent touch of the sensor: adjusts the temperature shown in 1 °C steps.

– Leaving a finger on the sensor changes the temperature continuously.

  A tone will sound (if the sensor tone is switched on) when the lowest or highest possible temperature is reached.

Approximately 5 seconds after the last time a sensor has been touched, the **actual** temperature inside the appliance is automatically shown.

When the temperature is altered, there is a short delay until the temperature selected is set.

The temperature display on the control panel always shows the **actual** temperature.

Temperature range

In both zones it is possible to set temperatures between 5 and 20 °C.

Temperature display

In normal operation the temperature display shows the actual temperature in the zone.

If the temperature in one of the zones is not within the range that the appliance is able to display, dashes will light up in the temperature display.

Depending on the ambient temperature and the temperature setting, it can take the appliance a few hours to reach the temperature required and for this temperature to then be shown as a constant temperature in the display.

Air quality and humidity

In most refrigerators the humidity is too low for wine and therefore a refrigerator is not suitable for wine storage. High humidity levels are necessary when storing wine to moisturise corks from the outside. When the humidity is too low the corks dry out and the bottle is no longer tightly sealed. For this reason wine bottles should always be stored horizontally to ensure that corks are also moisturised from the inside. If air gets into the bottle, this will have a negative impact on the wine!

Risk of damage!
Do **not** introduce additional moisture to air in the cabinet, e.g. by placing a dish of water in the wine unit. This will lead to condensation on the interior walls, Condensate can cause damage such as corrosion to the wine unit.

DynaCool (constant humidity)

DynaCool raises the relative humidity inside the appliance. DynaCool also distributes the humidity and the temperature evenly around the interior so that you can store all your wine under exactly the same excellent conditions. This will create a stable climate in the cabinet which imitates that of a wine cellar.

Switching on DynaCool

If you would like to use the wine conditioning unit to store wine long term, we recommend that you keep the DynaCool function switched on.



- Touch the sensor for switching the DynaCool function on and off so that it is highlighted in yellow.

Even if the DynaCool function has not been switched on, the fans in the appliance will come on automatically when the cooling system switches on to ensure your wine is kept in the optimum climate.

The fans automatically switch off when the door is open.

Switching off DynaCool

The appliance uses slightly more energy and is a little noisier when the DynaCool function is switched on. You can switch it off now and then if you wish.



- Touch the sensor for switching the DynaCool function on and off so that it is no longer highlighted in yellow.

Air filtration with the Active AirClean filter

The Active AirClean filter achieves optimum air quality by filtering the incoming air.

Fresh air from the room enters the appliance via the Active AirClean filter. The fans (DynaCool function) then distribute the air evenly throughout the cabinet.
Filtering the incoming air through the Active AirClean filter ensures that all the air entering the appliance is fresh and free from dust and odours.
This also ensures your wine does not absorb any unwanted odours through the corks.

Replace the Active AirClean filter regularly. The symbol will appear in the display to remind you (see "Active AirClean filter").

Temperature and door alarm

This wine conditioning unit is equipped with an alarm system so that the temperature cannot rise or fall unnoticed, thus possibly damaging the wine.

Temperature alarm

If the temperature in one of the wine conditioning zones rises or falls by a certain amount, the sensor for that zone will flash in the control panel and at the same time the alarm symbol ⚠ will flash in the display.
An alarm will also sound.

Audible and visual signals will be activated, for example,

– when the wine conditioning unit is switched on and the temperature in one of the temperature zones differs greatly from the set temperature,

– when too much warm ambient air enters the cabinet when bottles are being rearranged or taken out,

– when a large number of bottles are stored for the first time,

– in the event of a power cut.

As soon as the cause of the alarm has been rectified, the alarm will stop and the alarm symbol ⚠ will go out. The sensor for the relevant zone will light up constantly again.

Switching the temperature alarm off early

If the noise disturbs you, you can switch the alarm off if you wish.



■ Touch the sensor for switching off the temperature alarm.

The alarm will stop.
The relevant wine conditioning zone will continue to flash in the control panel and the alarm symbol ⚠ will continue to flash in the display until the cause of the alarm has been rectified.

Door alarm

The alarm will sound if the door is left open for more than approx. two minutes. The sensors for the wine conditioning zones will flash in the control panel. The alarm symbol ⚠ will light up in the display.

The alarm will stop when the door is shut. The sensors for the wine conditioning zones and the alarm symbol ⚠ will go out.

Switching the door alarm off early

If the noise disturbs you, you can switch the alarm off if you wish.



- Touch the sensor for switching off the door alarm.

The alarm will stop.
The sensors for the wine conditioning zone will continue to flash and the alarm symbol ⚠ will remain lit up until you close the door.

If the audible tone does not sound in the event of a door alarm, then the audible tone has been switched off in settings mode (see "Selecting further settings - Audible tones").

Feature lighting

The interior lighting can be set to remain on when the door is closed so your wines can be on display at all times.

Each wine conditioning zone has its own lighting strip so that all zones are illuminated.

Thanks to the use of LED lighting, the wine will not be adversely affected by heat or UV light.

Switching the feature lighting on and off



- Touch the On/Off sensor for the feature lighting so that it is highlighted in yellow.

The interior lighting is now switched on, even when the door is closed.

To switch the feature lighting off again:

- Touch the On/Off sensor for the feature lighting so that it is no longer highlighted in yellow.

The interior lighting is now switched off when the appliance door is closed.

Setting the brightness of the feature lighting

The brightness of the feature lighting can be adjusted.



- Touch the On/Off sensor for the feature lighting so that it is highlighted in yellow.
- Touch the sensor for the feature lighting again for approx. four seconds until *I* flashes in the display (after two seconds *h* will flash).
- Use the ∨ and ∧ sensors for altering the temperature to set the feature lighting brightness. Touch and hold the sensors. The brightness will immediately start to adjust gradually up or down.

By touching the sensor



– the lighting becomes dimmer



– the lighting becomes brighter.



- Touch the OK sensor to confirm your choice.

The selected brightness is saved and the temperature reappears in the display.

As soon as the appliance door is closed, the set brightness for the feature lighting takes effect. When the appliance door is opened, the interior lighting returns to its normal level.

Lighting duration of the feature lighting

The lighting duration for the feature lighting is set to 30 minutes as standard.
The lighting duration can be set to 30, 60, 90 minutes up to 00 (unlimited). The feature lighting will have the brightness setting you have selected previously.

- Open the appliance door.



- Touch the On/Off sensor for the feature lighting so that it is highlighted in yellow.
- Touch the sensor for the feature lighting again for approx. two seconds until *h* flashes in the display.
- Use the ∨ and ∧ sensors for altering the temperature to set the feature lighting duration.
  The duration (in minutes) will flash in the display.

By touching the sensor



– lighting duration is reduced by 30 minutes



– lighting duration is increased by 30 minutes.



- Touch the OK sensor to confirm your choice.

The selected lighting duration is saved and the temperature reappears in the display.

The lighting duration set starts anew whenever the appliance door is opened and closed.

Caution. Laser beam class 1M
Do not remove the lighting covers.
Should the covers be damaged or need to be removed due to damage, do not use optical instruments (magnifying glass or similar) to look at the lighting.

Storing wine bottles

Vibration and movement have a negative effect on the maturing process which can affect the taste of the wine.

To avoid disturbing other bottles when removing a bottle of wine, store bottles of the same type beside each other on the same shelf. Avoid stacking bottles on top of one another on the wooden shelves.

Always place the bottles lying down so that the corks can be kept moist on the inside and air is prevented from getting into the bottles.

⚠ Danger of injury.
Take care that wine bottles do not fall out of the appliance when you pull out a wooden shelf. Wine bottles could also become wedged in the shelf above.

Maximum stacking height for wine bottles in the cabinet

Wine bottles stored in the wine unit must not exceed the following heights bottles laid flat)

	Max. height
Bottles stored lengthways (standard)	310 mm
Bottles stored across the appliance (see "Storing wine bottles across the appliance")	437 mm

Wooden shelves

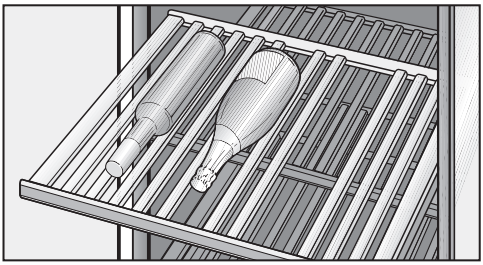

The wooden shelves are on telescopic runners which can be pulled out to make it easier to store and remove bottles.

Moving the wooden shelves

The wooden shelves can be removed and replaced again if required.

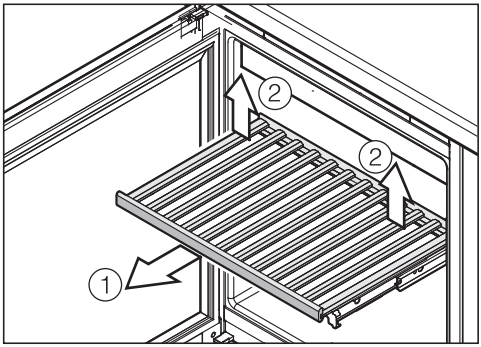

- Pull the wooden shelf out until it stops ①.
- Release the wooden shelf at the back, lifting the shelf on the left and right at the same time ②.
- Lift the wooden shelf forwards to remove it.

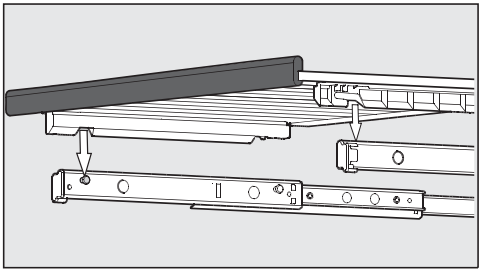

- To replace the shelf, place it on the extended rails. The notches in the wooden shelf fit onto the retaining bolts. The magnetic strip must face the front.

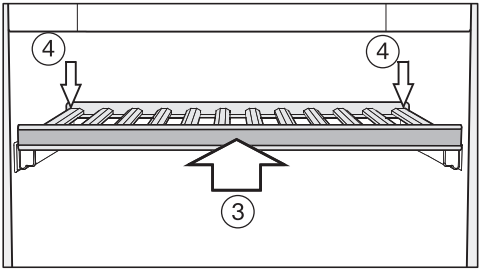

- Slide the wooden shelf back into the appliance as far as it will go ③.
- Push the wooden shelf right back so that it clicks into place at the front.
- Press down on the back of the wooden shelf until it clicks into place at the back ④.

Storing wine bottles

Adjusting the wooden shelves

The slats in the wooden shelves can be individually adjusted to suit, so that every bottle is stored in perfect safety regardless of shape or size.

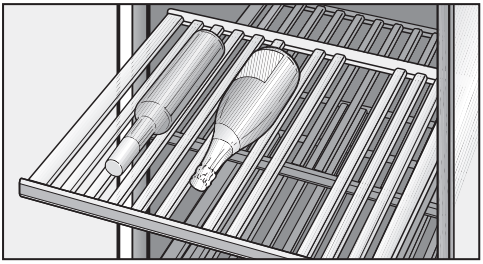

- Simply lift individual slats to move or remove them from the wooden shelves.

The slats in the decor shelf (at the bottom of the appliance) cannot be adjusted.

Annotating wooden shelves

For quick and easy identification of the wines being stored, you can annotate the blackboard surface on the magnetic strips on the wooden shelves.

Use the chalk supplied. You can write directly on the magnetic strip or remove it from the wooden shelf to do so:

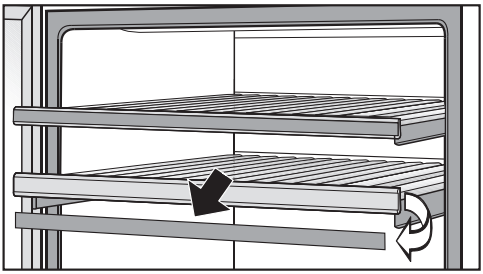

- Hold the magnetic strip by the sides and pull it forwards. The magnetic strip is held on the wooden shelf by magnets.
- Annotate the magnetic strip with the chalk supplied and replace it on the front of the wooden shelf.
- The magnetic strip can be wiped clean with a damp cloth.

Use clean water only to wipe the magnetic strips. **Do not use a cleaning agent** as this would damage the blackboard surface on the magnetic strips.

Inserting the decor shelf

- Place the decor shelf at the very bottom of the appliance (see "Description of the appliance").

Maximum capacity

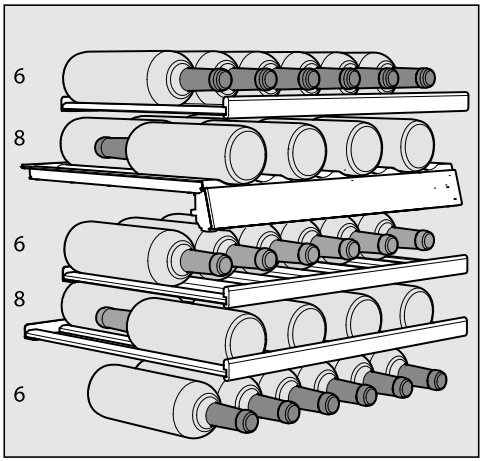

Up to 34 Bordeaux bottles (0.75 l) can be stored in the wine conditioning unit, with 14 in the upper zone and 20 in the lower zone.

The total of 34 bottles can only be achieved by using all the wooden shelves.

⚠
Please note that each wooden shelf has a maximum load-bearing capacity of 25 kg. Please avoid stacking bottles on the wooden shelves.

Automatic defrosting

The wine conditioning unit defrosts automatically.

Do not let water get into the electronic unit, the ventilation gap or the lighting.

Do not use a steam cleaning appliance to clean this wine conditioning unit. The steam could reach electrical components and cause a short circuit.

The data plate inside the wine conditioning unit must not be removed. It contains information which is required in the event of a service call.

Cleaning agents

To avoid damaging the surfaces of your appliance, **do not use:**

- cleaning agents containing soda, ammonia, acids or chlorides
- cleaning agents containing descaling agents
- abrasive cleaning agents, e.g. powder cleaners and cream cleaners
- solvent-based cleaning agents
- stainless steel cleaning agents
- dishwasher cleaner
- oven sprays
- glass cleaner (except on the glass in the appliance door)
- hard, abrasive sponges and brushes, e.g. pot scourers
- melamine eraser blocks
- sharp metal scrapers

Cleaning and conditioning agents used inside the wine conditioning unit must be food safe.

We recommend using lukewarm water with a little washing-up liquid to clean surfaces of the appliance.

The following pages contain important information on cleaning.

Before cleaning

- Switch off the wine conditioning unit.
- Disconnect it from the mains.
- Take any wine bottles out of the wine conditioning unit and store them in a cool place.
- Take out all other removable parts for cleaning.
- Remove the magnetic strips from the wooden shelves before cleaning them (see "Annotating wooden shelves").

Interior, appliance door and accessories

Clean the wine conditioning unit at least once a month.
Remove soiling immediately to prevent it from drying on.

- Clean the interior with a solution of lukewarm water and a little washing-up liquid.
- The wooden shelves should only be wiped with a well wrung-out damp cloth. **They must not be allowed to get wet.**
- Use clean water only to wipe the magnetic strips at the front of the wooden shelves. **Do not use a cleaning agent** as this would damage the blackboard surface on the magnetic strips.
- After cleaning, wipe the interior and accessories with a damp cloth, and dry with a soft cloth. Leave the door open to air the appliance for a short while.
- Clean the appliance door with a proprietary glass cleaner.

Cleaning the ventilation gaps

A build-up of dust will increase the energy consumption of the appliance.

- The ventilation gaps should be cleaned on a regular basis with a brush or vacuum cleaner (e.g. use the dusting brush for Miele vacuum cleaners)

Cleaning the door seal

Do not use any grease or oil on the door seal as these will cause the seal to deteriorate and become porous over time.

- The door seal should be cleaned regularly with clean water, and then wiped dry with a soft cloth.

Cleaning the air filter

- Clean the air filter behind the ventilation grille at least once a year.
- Remove the air filter and vacuum it thoroughly on both sides. A dirty filter can prevent the wine conditioning unit from cooling sufficiently.

After cleaning

- Replace all shelves and accessories in the wine conditioning unit.
- Reconnect to the mains and switch the wine conditioning unit back on.
- Place the wine bottles back in the wine conditioning unit and close the door.

Active AirClean filters

Fresh air from the room enters the wine conditioning unit through the Active AirClean filter. Filtering the incoming air through the Active AirClean filter ensures that all the air entering the appliance is fresh and free from dust and odours.

The reminder to change the Active AirClean filter will appear every 12 months at the latest.

When the Change Active AirClean filter symbol ❁ lights up in the display, the Active AirClean filter needs to be changed.

Replacing the Active AirClean filter

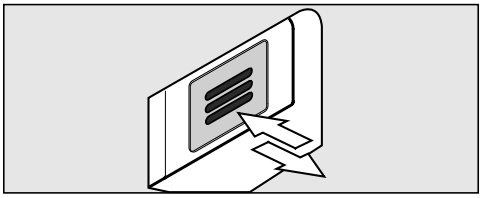

■ Push the filter in and then release it.

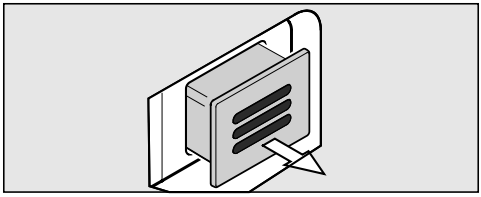

■ Pull the filter out.

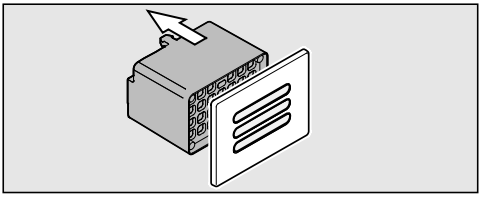

■ Detach the back part of the filter from the cover.

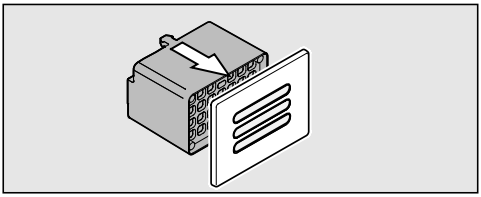

■ Push the new filter onto the cover.

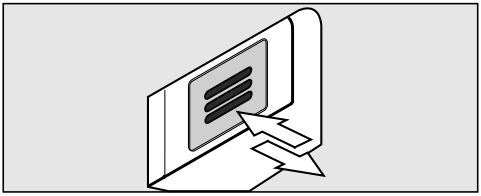

■ Insert the new filter.

■ Push the filter in and then release it. The filter will lock into place automatically with an audible click.

Active AirClean filters can be obtained from your Miele dealer, Miele or from the Miele website.

To confirm the filters have been changed



- Touch the settings sensor.

All symbols available for selection will appear in the display and the 🔒 symbol flashes.



- Touch the sensors for setting the temperature (∨ or ∧) repeatedly until the ❁ symbol flashes.



- Touch the OK sensor to confirm your selection.

The *1* will flash in the display (means: Active AirClean filter is fitted in the appliance), the ❁ symbol lights up.



- Touch the symbols for setting the temperature (∨ or ∧) repeatedly, until the *2* symbol is displayed (means: the counter has been reset).



- Touch the OK sensor to confirm your selection.

The selected setting is applied, the ❁ symbol flashes.



- Touch the settings sensor to leave settings mode.
  Otherwise the appliance exits settings mode automatically after approximately one minute.

The ❁ in the display goes out.

Problem solving guide

Some minor problems can be corrected without contacting Miele.
If, having followed the suggestions below, you still cannot resolve the problem, please contact Miele.

To prevent unnecessary loss of temperature it is advisable not to open the door while waiting for the wine conditioning unit to be serviced.

⚠ Unauthorised installation, maintenance and repairs can cause considerable danger for the user.
Installation, maintenance and repairs must only be carried out by a Miele authorised technician.

Problem	Cause and remedy
The wine conditioning unit is not getting cold, the interior lighting does not come on when the door is opened, and the display is not lit up.	The wine conditioning unit is not switched on and the mains connection symbol ⏚ is lit up in the display. ■ Switch on the wine conditioning unit.
	The plug is not inserted in the socket correctly. ■ Insert the plug correctly into the socket. The mains connection symbol ⏚ appears in the display when the wine conditioning unit is switched off.
	Check whether the mains fuse has tripped. If it has there could be a fault with the appliance, the household electrical wiring or another electrical appliance. ■ Contact a qualified electrician or Miele.
The ▮ symbol is displayed, the wine conditioning unit is not getting cold. However, the appliance and the interior lighting are working fine.	Demo mode is turned on and the ▮ symbol is illuminated in the display. ■ Switch off Demo mode (see "Information for dealers - Demo mode").

Problem	Cause and remedy
The compressor is switching on more frequently and for longer periods of time, the temperature in the wine conditioning unit is falling.	The temperature in the wine conditioning unit is set too low. ■ Adjust the temperature.
	The appliance door is not properly closed. ■ Check that the appliance door closes properly.
	The appliance door has been opened too frequently. ■ Only open the door when necessary and for as short a time as possible.
	The ventilation gaps have been covered over or become dusty. ■ Do not cover the ventilation gaps and dust them regularly.
	The air filter is dusty. ■ Clean the air filter (see "Cleaning and care").
	The ambient room temperature is too warm. ■ Decrease the ambient room temperature.
The compressor comes on less and less often and for shorter periods of time. The temperature in the wine conditioning unit rises.	This is not a fault. The temperature is too high. ■ Adjust the temperature. ■ Check the temperature again after 24 hours.
	The air filter in the plinth is soiled. ■ Clean the air filter in the appliance plinth (see "Cleaning and care").

Problem solving guide

Display warnings

Message	Cause and remedy
The alarm symbol ⚠ is lit in the display and both sensors for the wine conditioning zones are flashing in the control field. Furthermore, an audible alarm is also sounding.	The door alarm has been activated. ■ Close the appliance door. Both sensors for the wine conditioning zones and the alarm symbol ⚠ will go out and the audible alarm will stop.
The alarm symbol ⚠ is flashing in the display, and the sensor for one of the wine conditioning zones is also flashing. An audible alarm is also sounding.	The temperature in the zone concerned has risen higher or fallen lower than the temperature set. This could be due to: – the appliance door being opened too often, – blocked ventilation gaps, – a lengthy interruption to the power supply. ■ Rectify the cause of the alarm. The alarm symbol ⚠ will go out and the sensor for the zone concerned will light up constantly again. The audible alarm stops.
The Change Active AirClean filter symbol is lit up.	This is the reminder to change the Active AirClean filter. ■ Replace the Active AirClean filter and then confirm the filter change in settings mode (see "Active AirClean Filter").
A dash is lit up up/flashing in the display.	Only temperatures within the range the wine conditioning unit can display will be shown.
"F0" to "F3" or "S1" to "S3" appear in the display.	There is a fault. ■ Call Service.

The interior lighting is not working.

Problem	Cause and remedy
The LED interior lighting is not working.	The wine unit is not switched on. ■ Switch the wine unit on.
	To avoid overheating, the LED lighting switches itself off automatically after approx. 15 minutes if the door is left open. If this is not the cause, then there is a fault. ⚠ Danger of electric shock. There are live electrical components under the lighting cover. The LED lighting may only be repaired or replaced by a Miele authorised service technician. ⚠ Danger of injury from LED lighting. Light intensity corresponds to laser beam class 1/1M. The lighting covers must not be removed or damaged, or be removed due to damage. This could cause injury to your eyes. Do not look into the LED lighting (laser beam class 1/1M) with optical instruments (e.g. magnifying glass or similar). ■ Call Service.
The LED interior lighting is on even when the door is closed.	The feature lighting is switched on. ■ Switch the feature lighting off (see "Feature lighting").

Problem solving guide

General problems with the wine conditioning unit

Problem	Cause and remedy
There is no audible alarm although the door has been open for a long time.	This is not a fault. The alarm tone has been switched off in settings mode (see "Selecting further settings - Audible tones").
You cannot switch the wine conditioning unit off.	The safety lock is activated. The 🔒 symbol is lit up in the display. ■ Deactivate the lock (see "Selecting further settings - Activating or deactivating the lock").
The slats on the wooden shelves are warping.	Volume change due to moisture absorption or drying out is a typical characteristic of wood. An increase in humidity will cause wooden components to warp, which can lead to cracking. Knots and grain patina are part of the natural character of wood.
Mildew has begun to form on the wine bottle labels.	Mildew can begin to form on the labels, depending on the type of label adhesive used. ■ Clean the wine bottles and remove any adhesive residue.
A white deposit has formed on the wine bottle corks.	The corks have oxidised due to contact with the air. ■ Use a dry cloth to wipe off the deposit. The deposit will not affect the quality of the wine.

Normal noises	What causes them
Brrrrr ...	A humming noise is made by the motor (compressor). This noise can get louder for brief periods when the motor switches on.
Blubb, blubb ...	A gurgling noise can be heard when coolant is circulating through the pipes.
Click ...	Clicking sounds are made when the thermostat switches the motor on and off.
Sssrrrrr ...	On multi-zone wine conditioning units you can sometimes just hear the sound of the fan inside the appliance.
Crack ...	A cracking sound can be heard when material inside the wine conditioning unit expands.
Remember that the noise of the compressor and the coolant circulating in the system is unavoidable.	

Noises that you can easily rectify	Possible cause	Remedy
Rattling, vibrating	The wine conditioning unit is uneven.	Realign the wine conditioning unit using a spirit level, by raising or lowering the screw feet underneath the appliance.
	Shelves are unstable or sticking.	Check all removable items and refit them correctly.
	Bottles or containers are touching each other.	Separate them.
	The transport cable clips are hanging loose at the back of the appliance.	Remove the cable clips.

After sales service

In the event of any faults which you cannot easily remedy, please contact

– your Miele Dealer, or

– the Miele Service Department.

See end of this booklet for contact details.

When contacting your Dealer or Miele, please quote the model and serial number of your appliance.

This information is given on the data plate inside the wine conditioning unit.

Please note that telephone calls may be monitored and recorded for training purposes.

Warranty: U.K.

In the U.K. the appliance warranty is valid for 2 years from the date of purchase. However, you must activate your cover by calling 0330 160 6640 or registering online at www.miele.co.uk.

Warranty: Other countries

For information on the appliance warranty specific to your country please contact Miele.

See end of this booklet for contact details.

Demo mode

The wine conditioning unit can be demonstrated in the showroom or at exhibitions in "Demo mode". In this mode the control panel and interior lighting are active but the compressor remains switched off, so that the appliance does not cool down.

Switching on demo mode



- Switch the wine conditioning unit off by touching the On/Off sensor.

The temperature display will go out and the mains connection symbol will appear.



- Place your finger on the ∨ sensor, and leave it there.



- At the same time, briefly touch the On/Off sensor (without letting go of the ∨ sensor).



- Leave your finger on the ∨ sensor until the symbol appears in the display.
- Then release the ∨ sensor.

Demo mode is activated and the symbol appears in the display.

Switching off Demo mode

The symbol is lit up in the display.



- Touch the settings sensor.

All symbols available for selection will appear in the display and the symbol flashes.



- Touch the sensors for setting the temperature (∨ or ∧) repeatedly until the symbol flashes.



- Touch the OK sensor to confirm your selection.

1 flashes in the display (means: Demo mode is switched on) and the symbol lights up.



- Touch the ∨ or ∧ sensor until *0* appears (means: Demo mode is switched off).



- Touch the OK sensor to confirm your selection.

The selected setting is applied, the ▮ symbol flashes.



- Touch the settings sensor to leave settings mode.
  Otherwise the appliance exits settings mode automatically after approximately one minute.

Demo mode is switched off, the ▮ symbol goes out.

The appliance is supplied with a mains cable with moulded plug for connection to a 50 Hz 220–240 V supply.

The fuse rating must be at least 10 A (13 A in the UK).

All electrical work should be carried out by a suitably qualified and competent person in strict accordance with current local and national safety regulations (BS 7671 in the UK). Please ensure that the connection data quoted on the data plate match the household mains supply.

Connection should be made via a suitable switched socket which is easily accessible. It must not be located behind the appliance.

If the mains socket is not accessible after the appliance has been installed, a separator for each terminal must be present. There must be an all-pole contact gap of at least 3 mm in the switch (including switch, fuses and relays according to EN 60335).

The plug and mains connection cable must not come into contact with the back of the appliance as vibrations can cause damage to these components. This, in turn, could result in a short circuit.

Do not plug in other appliances behind this wine conditioning unit.

Do not connect the appliance to the mains electricity supply by an extension lead. Extension leads do not guarantee the required safety of the appliance (e.g. danger of overheating).

Do not connect the appliance to an inverter such as those used with an autonomous energy source e.g. **solar power**. When switched on, peak loads in the system can cause the safety switch-off mechanism to be triggered. This can damage the electronic unit. The appliance must not be used with so-called **energy-saving devices** either. These reduce the amount of energy supplied to the appliance, causing it to overheat.

If the mains cable needs to be replaced this must be done by a suitably qualified person.

A wine unit that has not been installed in its niche can tip up.
Keep the appliance door shut until the wine unit has been built in and secured in its housing in accordance with these operating and installation instructions.

⚠ Fire risk and danger of damage!
This wine unit must not be installed underneath a hob.

Location

This appliance should be installed in a dry, well-ventilated room.

When deciding where to install your wine unit please bear in mind that it will use more energy if installed near to a heater, a cooker or other appliance that gives off heat. Direct sunlight should also be avoided.
The higher the room temperature, the longer the compressor runs and the higher the energy consumption is.

When installing the wine unit, please note:

– The socket must be easily accessible in an emergency, not concealed behind the appliance.

– The plug and cable must not touch the back of the wine unit as they could be damaged by vibrations from the appliance.

– Do not plug in other appliances behind this wine unit.

⚠ Danger from broken glass!
Danger of injury from broken glass.
If installed at altitudes above 1500 m there is a risk of the glass in the door breaking because of changes in air pressure. Shards of glass can cause severe injury if not handled with care.

Side-by-side

This wine conditioning unit can be installed side-by-side with another refrigeration appliance.

A side-by-side installation kit is required for this. This is available from Miele or your Miele dealer.

Your dealer will be able to advise you which combination of models is possible.

Instructions for fitting appliances side-by-side are given in the side-by-side fitting kit instruction manual.

Climate range

The wine conditioning unit is designed for use within a certain climate range (ambient temperatures) and should not be used outside this range. The climate range of the wine conditioning unit is stated on the data plate inside it.

Climate range	Ambient room temperature
SN	+10 °C to +32 °C
N	+16 °C to +32 °C
ST	+16 °C to +38 °C
T	+16 °C to +43 °C

Operating in a room which is too cold will cause the compressor to switch off for too long, causing the internal temperature in the wine conditioning unit to rise which could lead to damage.

IMPORTANT
In environments with high humidity condensation may appear on the external surfaces of the wine conditioning unit.

Condensate can cause corrosion on external appliance walls.

For prevention, it is advisable to install the wine conditioning unit with sufficient ventilation in a dry and/or air conditioned room.

After installation make sure that the appliance door closes properly, the ventilation gaps are not covered and that the wine conditioning unit has been installed in accordance with these installation instructions.

Ventilation

The wine conditioning unit is ventilated via the grille in the plinth. This must not be covered over or blocked. Clean the plinth regularly to remove any dust.

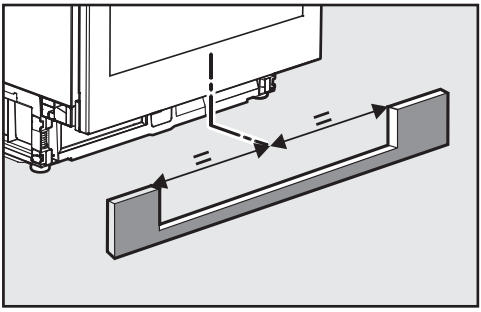

The cut-out in the plinth facing must be aligned centrally with the wine conditioning unit.

Before installing the wine conditioning unit

- Take any accessories out of the appliance.

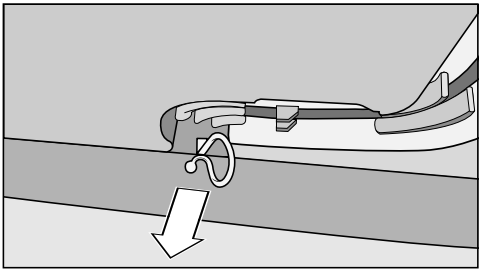

- Remove the cable clip from the back of the appliance (depending on model).

Door opening angle limiter

The door opening angle limiter restricts the opening angle of the appliance door to 90°. This may be necessary if the appliance door hits an adjacent wall when opened, for example (see "Adjusting the door hinges").

Appliance dimensions

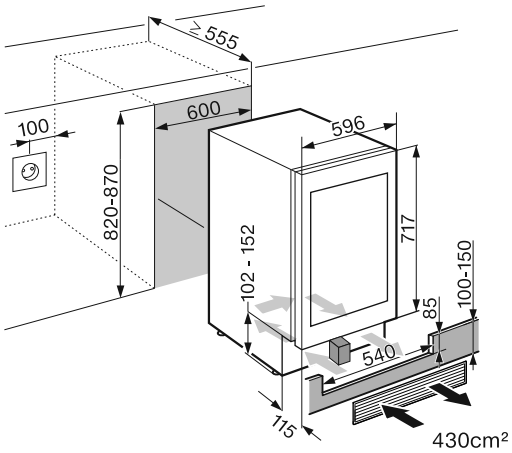

Before installation, ensure the building-in niche is the correct size. The specified ventilation cross-sections must be adhered to and the cut-out in the plinth facing for the ventilation grille supplied must be aligned centrally with the wine conditioning unit in order to ensure the correct functioning of the wine conditioning unit.

The ventilation grille supplied and foam block supplied must be fitted and used together.

The door hinges on the wine conditioning unit are set ex works to enable the appliance door to be opened wide.

However if the opening angle of the door needs to be limited for any reason, the hinge can be adjusted to accommodate this.

If the appliance door hits an adjacent wall when opened, for example, the opening angle can be limited to approx. 90°.

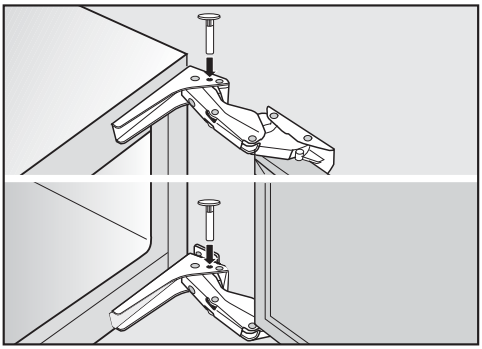

- Place the locking pins supplied for limiting the door opening into the hinges from above.

The door opening angle is now limited to approx. 90°.

Changing the door hinging

The wine conditioning unit is supplied right-hand hinged. If left-hand hinging is required, the hinges must be changed.

To change the door hinging, you will need the following tools:

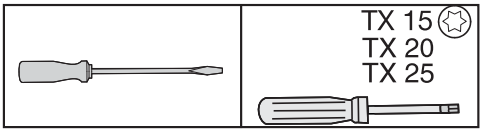

Warning! The glass door is breakable!
Two people are needed for changing the door hinging.

- Place a suitable cover on the floor in front of the appliance to protect the glass door and your floor from damage.

Be careful not to damage the door seal. If the door seal is damaged, the appliance door may not close properly and cooling will be insufficient.

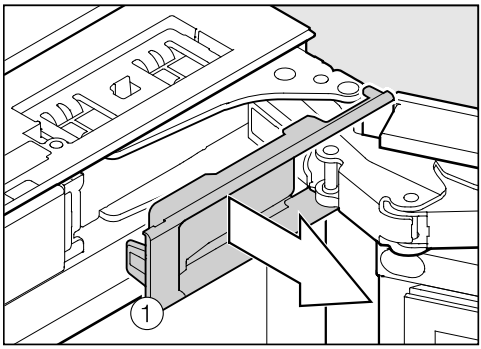

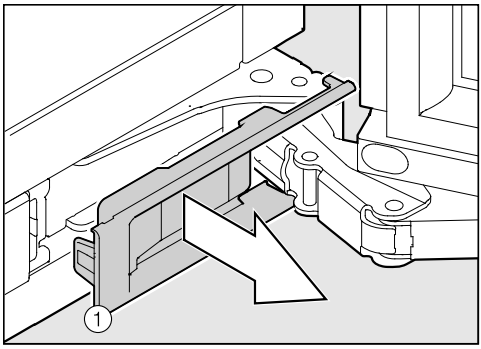

- Remove covers ①.

⚠ The second person must support the appliance door.
Caution. When the hinge is subsequently released, the door is no longer secure.

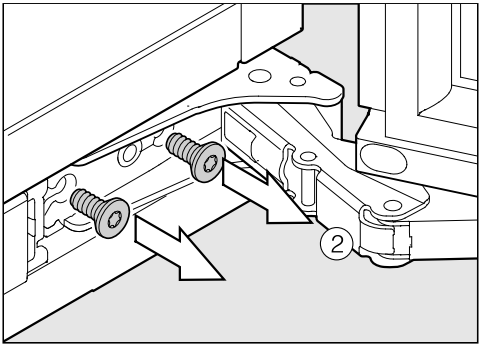

■ Remove screws ② first from the lower hinge.

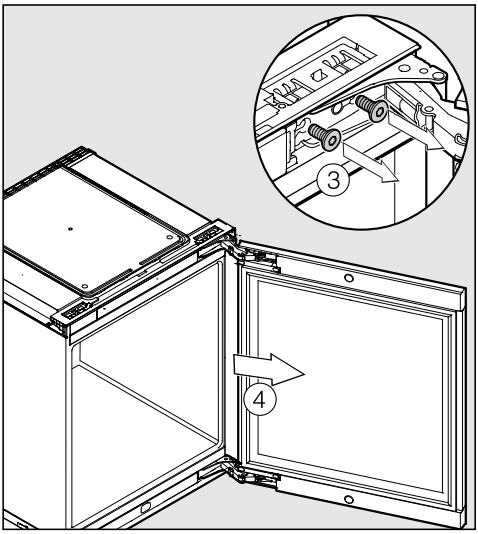

■ Remove screws ③ from the upper hinge.

■ Take the appliance door ④ off.

■ Place the appliance door with the outer side upwards on a stable surface.

⚠ Danger of injury.
Do not close the hinges.

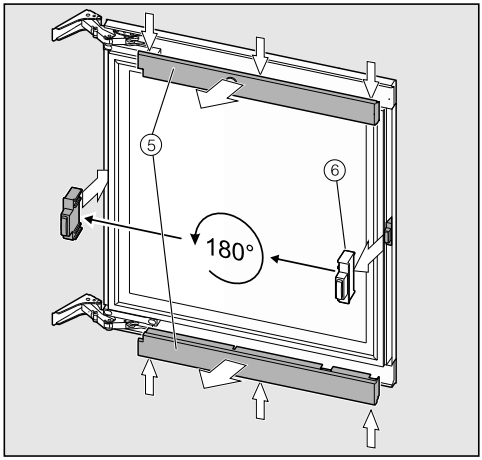

■ Unclip upper and lower covers ⑤.

■ Remove spacer ⑥ from the appliance door, rotate it through 180 ° and fit it on the opposite side.

Changing the door hinging

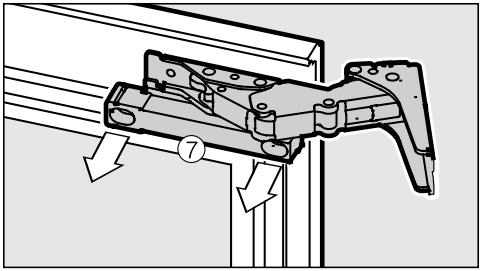

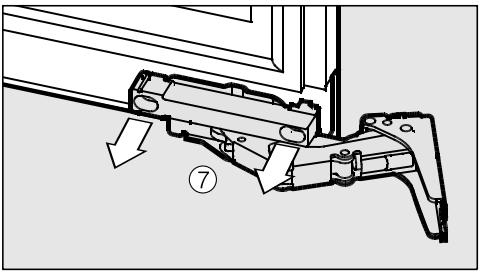

■ Remove screws ⑦ completely.

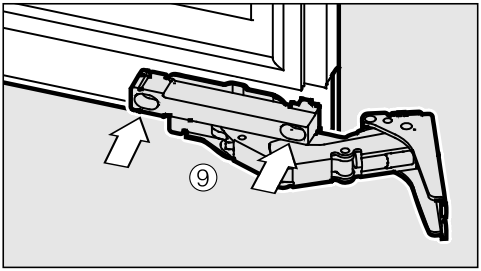

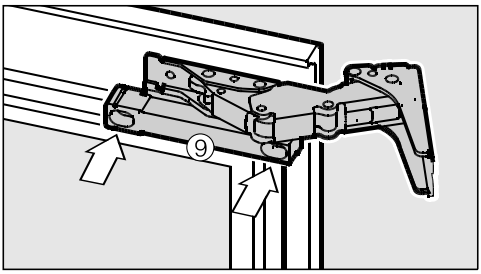

■ Replace screws ⑨.

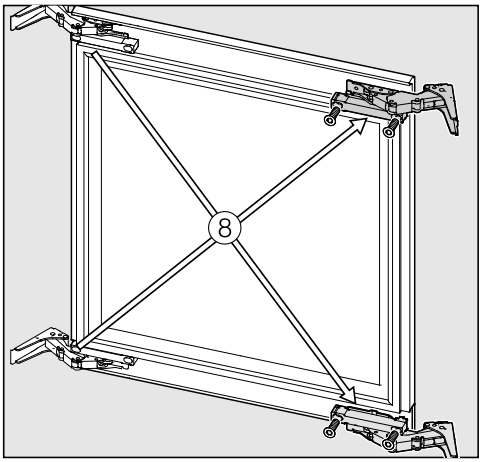

■ Replace the hinges in their diagonally opposite corners ⑧.

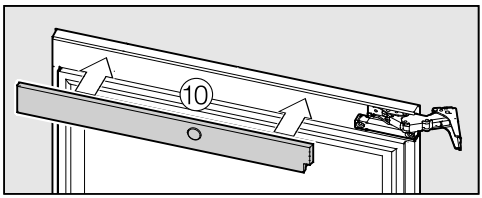

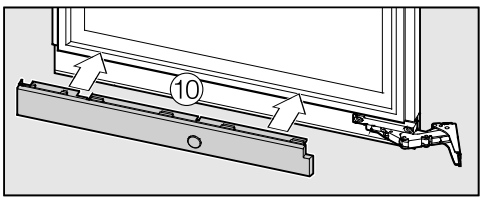

■ Clip covers ⑩ back on. Note the position of the notches on the hinges.

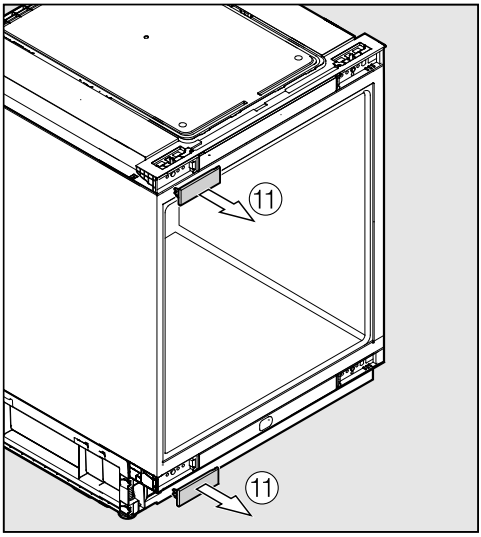

■ Remove covers ⑪.

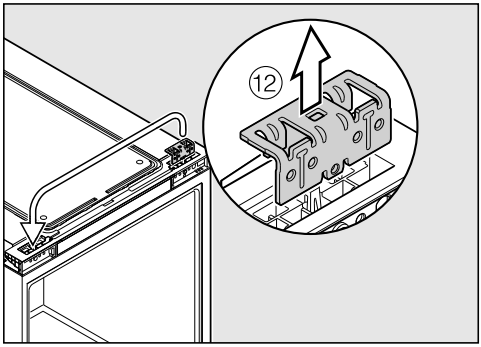

■ Take off upper retaining bracket and replace it on the opposite side ⑫.

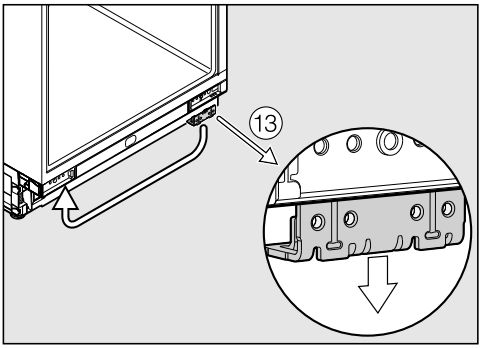

■ Take off lower retaining bracket ⑬ and refit it on the opposite side.

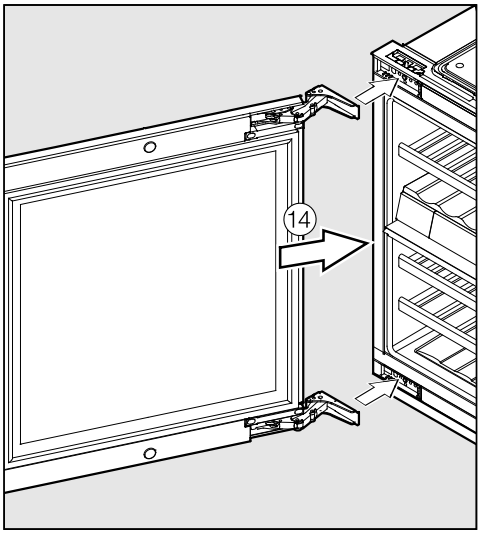

■ Fit the appliance door ⑭.

⚠ Danger of injury.
The second person must support the appliance door.

Changing the door hinging

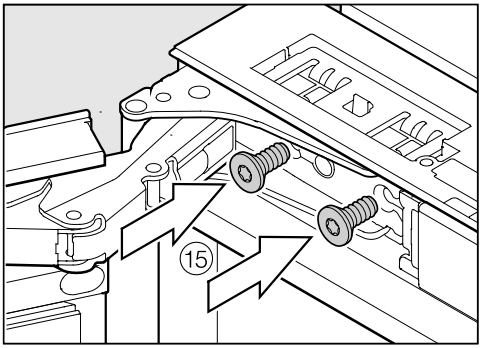

■ Tighten the screws in upper hinge ⑮.

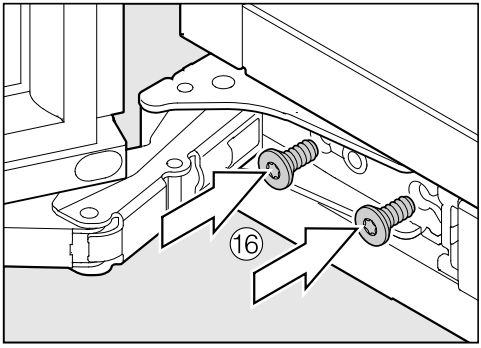

■ Tighten the screws in lower hinge ⑯.

■ Now install the wine conditioning unit.

⚠ Warning! Do not drop the appliance. Risk of injury and damage.
Two people are required for installing this wine conditioning unit.

- Install the wine conditioning unit in a stable, solid housing unit, positioned on an even and level floor.
- The niche must be horizontally and vertically aligned.
- The required ventilation cross-sections must be ensured (see "Installation - Ventilation" and "Building-in dimensions").

To install the wine conditioning unit, you will need the following tools:

– Screwdrivers of various sizes

– A spirit level

– A tape measure

The following installation parts are required:

– Ventilation grille

– Air filter

– Foam block for airflow separation in the appliance plinth

– Screws to secure the appliance in the niche

– Spanner to adjust height in the niche

Setting up the wine conditioning unit

The air filter prevents soiling of the compressor compartment to ensure efficient functioning of the appliance.

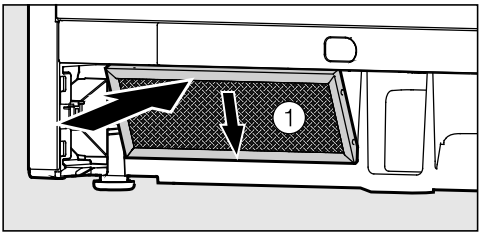

- Remove the protective foil from air filter ①.
- Insert the air filter into the bottom left of the appliance plinth.
- Connect the wine conditioning unit to the mains electrical supply (see "Electrical Connection").
- Position the wine conditioning unit in front of the niche.

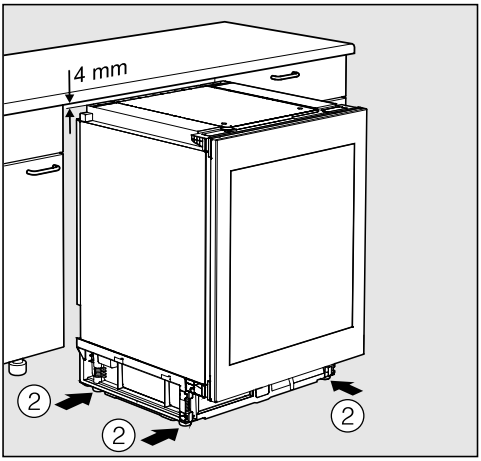

- Unscrew feet ② clockwise until the appliance is 4 mm less than the height of the niche.

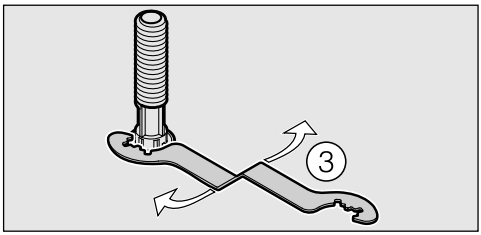

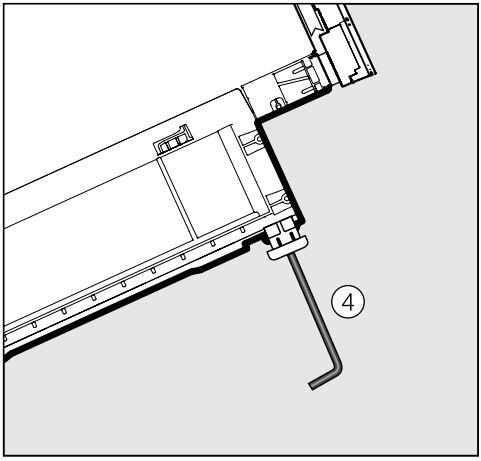

- The feet can be adjusted with the spanner supplied ③ or with an allen key ④.

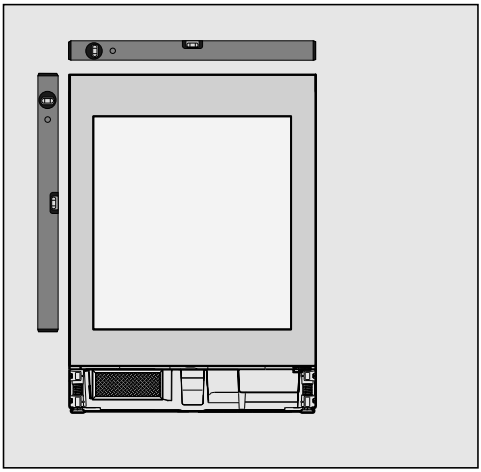

- Align the wine conditioning unit horizontally and vertically. If the wine conditioning unit is not correctly aligned it can distort.
- Check the alignment of adjacent furniture housing doors. If adjacent doors vary in height from the wine conditioning unit, see "Aligning the wine conditioning unit to taller furniture doors".

Installing the wine conditioning unit

Aligning the wine conditioning unit to taller furniture doors

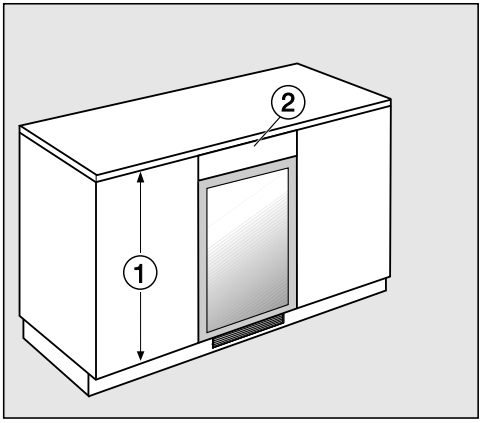

If adjacent furniture housing doors ① are taller than the wine conditioning unit door, the wine conditioning unit can be aligned to the adjacent furniture doors using a filler panel ②.

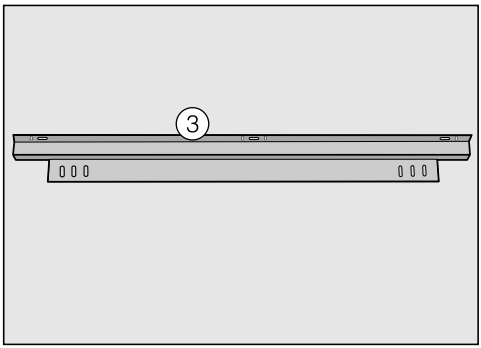

A bracket ③ is required to secure the filler panel, which is available from the Miele Spare Parts Department or from your dealer. The filler panel can be fitted above or below the wine conditioning unit as required.

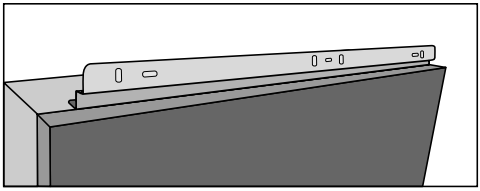

⚠

To avoid damaging the wine conditioning unit, the ventilation grille must be positioned precisely in front of the vent outlet. If you wish to fit a plinth facing across the front of the wine conditioning unit make sure it provides adequate ventilation.

The filler panel must be made exactly to measure.

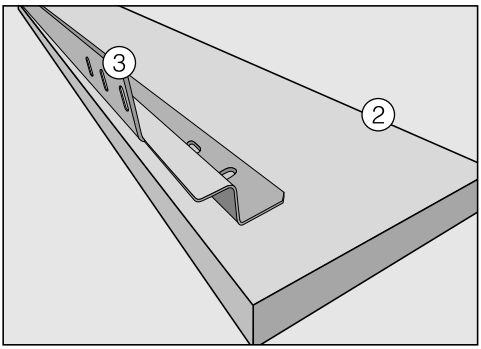

- Fix bracket ③ to the back of filler panel ②.
- Pull the wine conditioning unit as far as you need to out of the niche so that you can tilt it towards you.
- Loosely hand-screw the bracket with the filler panel to the wine conditioning unit.
- Align the filler panel to the wine conditioning unit door using the long slots to give a flush finish.

- Now tighten the screws.
- You can now push the wine conditioning unit into the niche.

Push the wine conditioning unit into the niche

⚠
Make sure that the mains cable does not become trapped or damaged as you push the wine conditioning unit into its niche.
To avoid damaging flooring which is susceptible to scratching, take great care when pushing the appliance into its niche.

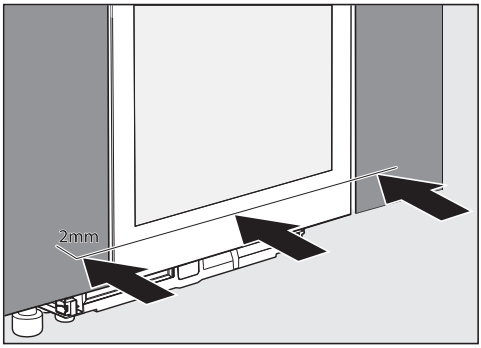

- Push the wine conditioning unit into the niche until the front of the appliance door is flush with adjacent furniture doors.
- Pull the wine conditioning unit forward so that it stands proud of the furniture doors evenly by 2 mm.

Secure the wine conditioning unit in the niche

- The wine conditioning unit must stand proud of furniture doors evenly by 2 mm.
- Open the appliance door.

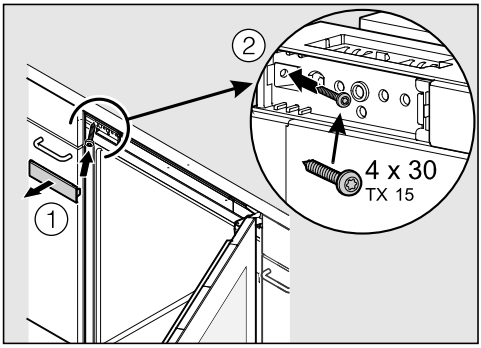

- Remove cover ①, and first screw the wine conditioning unit to the adjacent furniture unit at the top left ②.

The wine conditioning unit will align itself to the left side of the niche. The front of the appliance door must be flush with the furniture front.

- Refit the cover ①.

Installing the wine conditioning unit

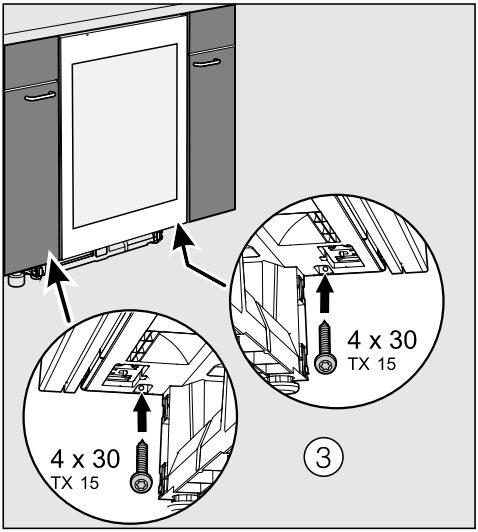

- Screw the wine conditioning unit at the bottom left and right to adjacent furniture units.
- If necessary a fourth screw can be used in the top right hand hinge to secure the wine conditioning unit.

To do so dismantle the door and then fit this extra screw.

- Close the appliance door and check that the side edges of the appliance door are aligned with the side walls of the wine conditioning unit.
- Now connect the wine conditioning unit to the electrical supply.

When the wine conditioning unit is connected to the electrical supply, the mains connection symbol ⊣⊐ will appear in the display after a short while.



- Touch the On/Off sensor.

The mains connection symbol ⊣⊐ will go out and the wine conditioning unit will start to cool.

The Push2open system on the wine conditioning unit is now activated (see "Door catch").

Adjusting the lateral alignment of the appliance door

If the appliance door is not aligned with the housing side walls, the appliance door can be adjusted using the screws underneath the hinges.

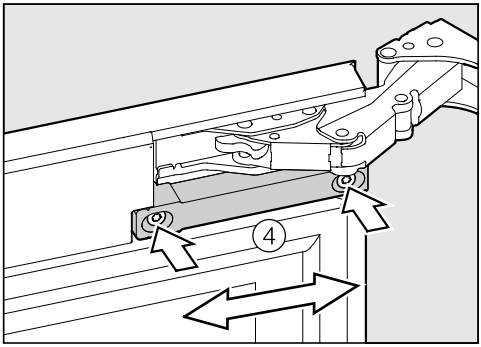

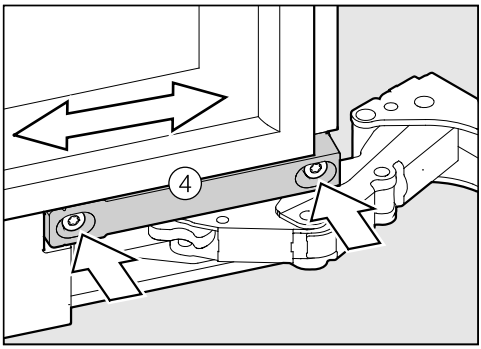

- Loosen screws ④ and align the appliance door.
- Tighten screws ④ again.

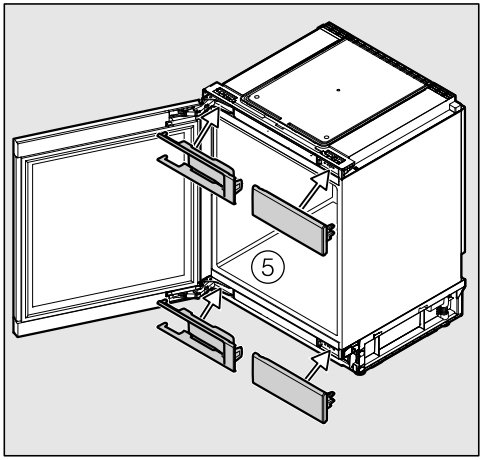

- Fit the covers.

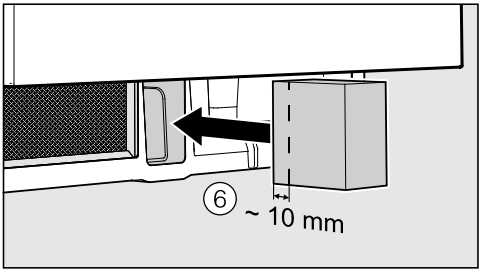

- Insert foam block ⑥ supplied into the appliance plinth.

⚠

If the foam block is not fitted, the wine conditioning unit will not achieve optimum cooling and can suffer damage.

Installing the wine conditioning unit

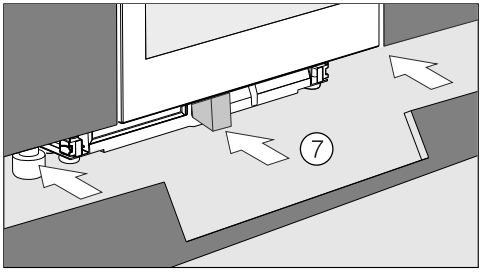

■ Fit plinth facing ⑦ in position.

⚠
The cut-out in the plinth facing must be aligned centrally with the wine conditioning unit.

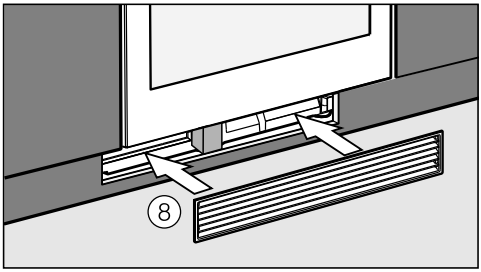

■ Fit plinth ventilation grille ⑧. As you do so the foam block will be pushed back.

⚠
The foam block must be resting against the ventilation grille in order to separate the airflow.

United Kingdom
Miele Co. Ltd., Fairacres, Marcham Road, Abingdon, Oxon, OX14 1TW
Tel: 0330 160 6600, Internet: www.miele.co.uk/service, E-mail: info@miele.co.uk

Australia
Miele Australia Pty. Ltd.
ACN 005 635 398
ABN 96 005 635 398
1 Gilbert Park Drive
Knoxfield, VIC 3180
Tel: 1300 464 353
Internet: www.miele.com.au

China Mainland
Miele Electrical Appliances Co., Ltd.
1-3 Floor, No. 82 Shi Men Yi Road
Jing' an District
200040 Shanghai, PRC
Tel: +86 21 6157 3500
Fax: +86 21 6157 3511
E-mail: info@miele.cn,
Internet: www.miele.cn

Hong Kong, China
Miele (Hong Kong) Ltd.
41/F - 4101, Manhattan Place
23 Wang Tai Road
Kowloon Bay, Hong Kong
Tel: (852) 2610 1025
Fax: (852) 3579 1404
Email:
customerservices@miele.com.hk
Website: www.miele.hk

India
Miele India Pvt. Ltd.
Ground Floor, Copia Corporate Suites
Plot No. 9, Jasola
New Delhi - 110025
Tel: 011-46 900 000
Fax: 011-46 900 001
E-mail: customercare@miele.in
Internet: www.miele.in

Ireland
Miele Ireland Ltd.
2024 Bianconi Avenue
Citywest Business Campus
Dublin 24
Tel: (01) 461 07 10
Fax: (01) 461 07 97
E-Mail: info@miele.ie
Internet: www.miele.ie

Malaysia
Miele Sdn Bhd
Suite 12-2, Level 12
Menara Sapura Kencana
Petroleum
Solaris Dutamas No. 1
Jalan Dutamas 1
50480 Kuala Lumpur, Malaysia
Phone: +603-6209-0288
Fax: +603-6205-3768

New Zealand
Miele New Zealand Limited
IRD 98 463 631
8 College Hill
Freemans Bay, Auckland 1011
New Zealand
Tel: 0800 464 353
Internet: www.miele.co.nz

Singapore
Miele Pte. Ltd.
29 Media Circle
#11-04 ALICE@Mediapolis
Singapore 138565
sTel: +65 6735 1191
Fax: +65 6735 1161
E-Mail: info@miele.com.sg
Internet: www.miele.sg

South Africa
Miele (Pty) Ltd.
63 Peter Place
Bryanston 2194
P.O. Box 69434
Bryanston 2021
Tel: (011) 875 9000
Fax: (011) 875 9035
E-mail: info@miele.co.za
Internet: www.miele.co.za

Thailand
Miele Appliances Ltd.
BHIRAJ TOWER at EmQuartier
43rd Floor Unit 4301-4303
689 Sukhumvit Road
North Klongton Sub-District
Vadhana District
Bangkok 10110, Thailand

United Arab Emirates
Miele Appliances Ltd.
Showroom 1
Eiffel 1 Building
Sheikh Zayed Road, Umm Al Sheif
P.O. Box 114782 - Dubai
Tel. +971 4 3044 999
Fax. +971 4 3418 852
800-MIELE (64353)
E-Mail: info@miele.ae
Website: www.miele.ae

Manufacturer: Miele & Cie. KG, Carl-Miele-Straße 29, 33332 Gütersloh, Germany

Miele

KWT 6322 UG

CE en-GB, ZA M.-Nr. 10 531 901 / 01