Oven – H 7860 BP Brilliant White





*Picture for reference only

Design
- Fits into a niche of 60 cm wide, 60 cm height
- 76 L pyrolytic enamel interior, 5 shelfs level
- VitroLine Brilliant white design with glass fascia with Brilliant white glass inlay handle, bottom-hinged door

Controls
- M Touch control – high quality TFT colour touch display
- Multi-lingual display including Chinese languages
- MotionReact – display and cavity light control with motion

Operating modes
- Oven function (30-300˚C) – Moisture plus, Fan plus, Conventional / Top / Bottom heat, Intensive bake, Grill, Fan grill, Auto roast, Defrost, Special Applications
- Approx. 80 automatic programmes, 20 own programmes

Special features
- FoodView – transmission of HD colour images for monitoring cooking process via Miele@mobile app
- TasteControl – prevent overcook by residual heat thanks to intelligence cavity cool down
- MobileControl function via Miele@mobile app, SuperVision
- Wireless food probe
- Moisture plus – perfect results thanks to steam bursts
- Pyrolytic self-cleaning, with AirClean catalyser
- Quadruple glazed CleanGlass door
- BrilliantLight cavity illumination
- Keeping warm, Crisp function

Safety
- Cooling system, Touch-cool front, System lock, Safety switch-off, Door locking during pyrolytic cleaning

Energy efficiency
- EU Energy efficiency rating: A+

Accessories
- 1 baking tray, 1 universal tray, 1 roasting insert HGBB 71, 1 wire rack (PyroFit), 1 pair FlexiClip runners (PyroFit)

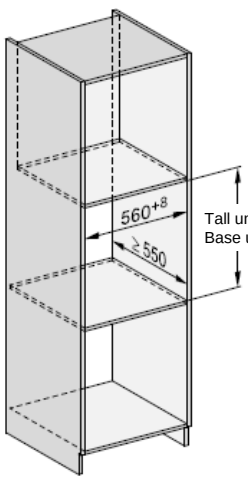

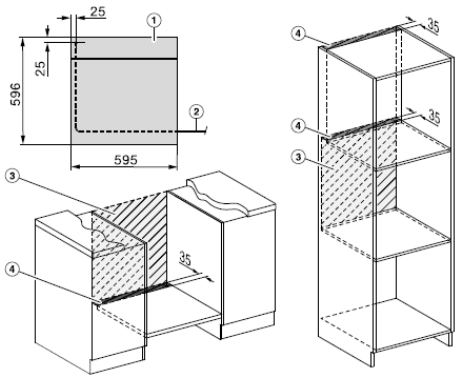

① Front view
② Mains connection cable, length = 2000 mm
③ No connections permitted in this area
④ Ventilation cut-out, min. 150 cm²

*Please refer to installation instruction booklet for detailed installation requirement and information.

Installation requirements
- 220-240 V
- Rated load 3.7 kW
- Fuse rating 20 A, without plug
- Electrical supply required, 3-core connection cable length 200 cm. No connections permitted at the back of the appliance.

Cut-out Dimensions

Height:	59.0 – 59.5 cm
Width:	56.0 – 56.8 cm
Depth:	min. 55.0 cm

Appliances Dimensions

Height:	59.6 cm
Width:	59.5 cm
Depth:	57.0 cm
Net weight:	approx. 47 kg

Miele (Hong Kong) Ltd
41/F - 4101, Manhattan Place,
23 Wang Tai Road,
Kowloon Bay
Hong Kong
Tel: + 852 2610 1331 Fax: + 852 2610 1013

Due to continuous product improvement , Miele reserves the right to make changes to products and technical data without prior notice.